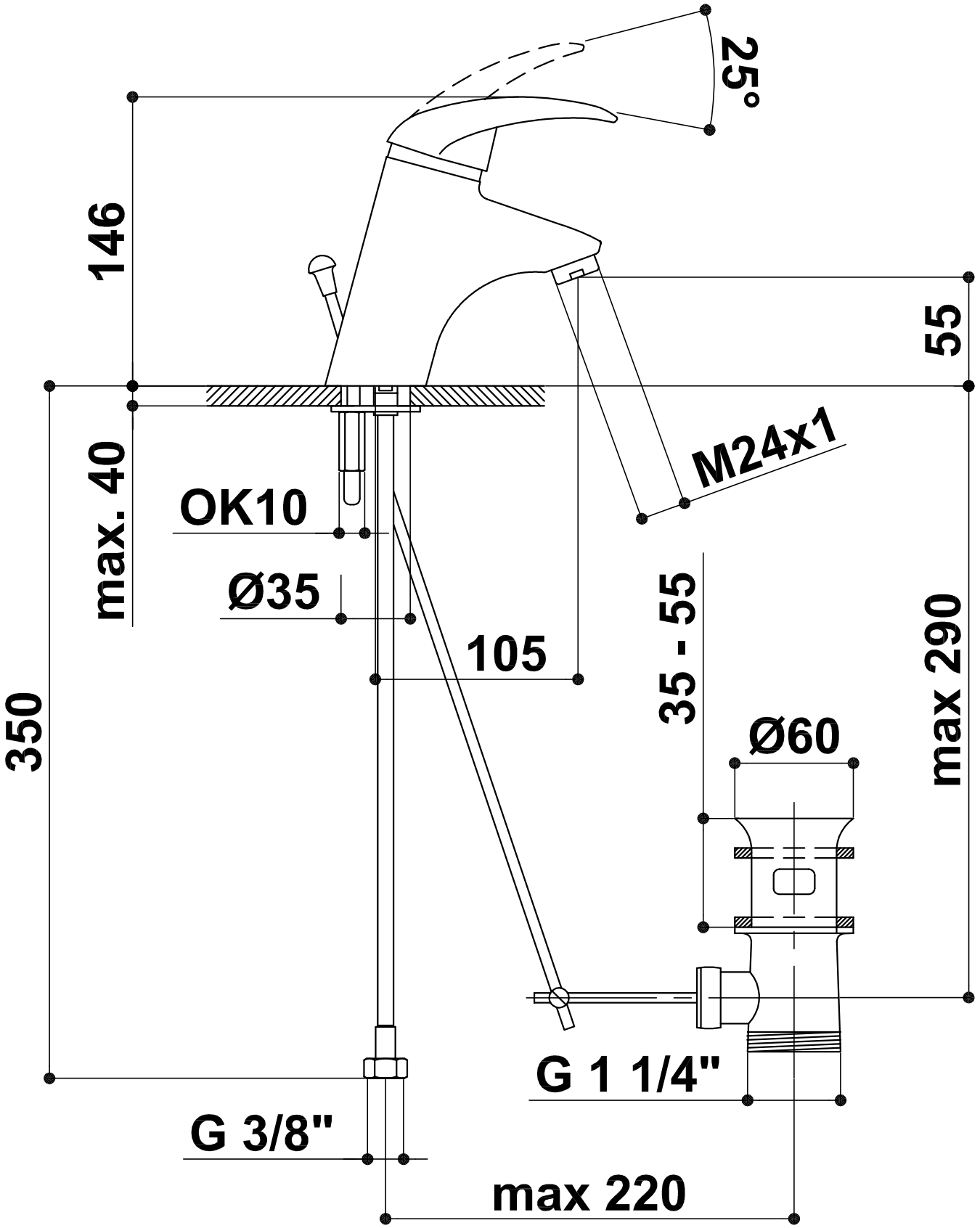
25°
146
55
M24x1
max. 40
OK10
Ø35
105
35 - 55
max 290
350
Ø60
G 1 1/4"
G 3/8"
max 220